CE-6633 EX1

FUJITSU TEN SERVICE MANUAL

AM-FM MPX. RADIO WITH ELECTRONIC TUNER and CASSETTE TAPE PLAYER

K11R (CE-6633EX1)

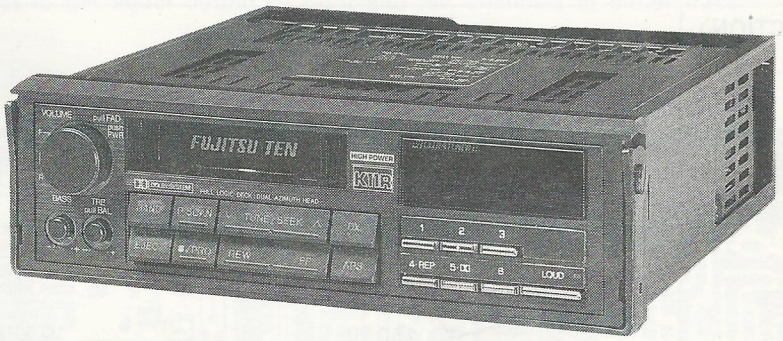

TABLE OF CONTENTS

	PAGE
SPECIFICATIONS	2, 3
COMPOSITIONS, CONNECTIONS	4
EXPLODED	4, 5
SCHEMATIC	5, 6
WIRING ON PC BOARD	7, 8
WIRING ON PC BOARD	9, 10
ALIGNMENT	11–13
EXPLODED VIEW (CASSETTE DECK)	14
REPLACEMENT PARTS LIST	15–19

* Dolby noise reduction manufactured under license from Dolby Laboratories Licensing Corporation.
"DOLBY" and the double-D symbol are trademarks of Dolby Laboratories Licensing Corporation.

SPECIFICATIONS
K11R (CE-6633EX1)

ITEM	K11R (CE-6633EX1)	
(RADIO SECTION)	〔AM〕	〔FM〕
TUNING RANGE	530 to 1620 kHz (9 kHz step)	88.1 to 107.9 MHz (50 kHz step)
INTERMEDIATE FREQUENCY	450 kHz	10.7 MHz
SENSITIVITY	35 dBμ or better	
SENSITIVITY AT ELECTRONIC TUNING	Distant: 37 ± 6 dBμ Local: Distant sens. +25 ± 6 dBμ	Distant: 20 ± 6 dBμ Local: Distant sens. +25 ± 6 dBμ
LIMITING SENSITIVITY		4^{-7}_{+6} dBμ
SEPARATION		20 dB or better (at 1 kHz)
ELECTRICAL FIDELITY	100 Hz: 0 ± 3 dB (74 dBμ input, Refer. 400 Hz) 4 kHz: −12.5 ± 6 dB (74 dBμ input, Refer. 400 Hz)	100 Hz: 0 ± 3 dB (54 dBμ input, Refer. 400 Hz) 10 kHz: −14 ± 5 dB (54 dBμ input, Refer. 400 Hz)
(CASSETTE DECK SECTION)		
NUMBER OF TRACKS	4-track 2-channels	
TAPE CARTRIDGE	Stereo/Monaural compact cassette	
TAPE SPEED	4.76 cm/sec. (1-7/8", i.p.s.)	
WOW & FLUTTER	0.3% or less (WRMS)	
CROSSTALK	50 dB or better (1 kHz, BPF使用)	
SEPARATION	30 dB or better	
FREQUENCY RESPONSE	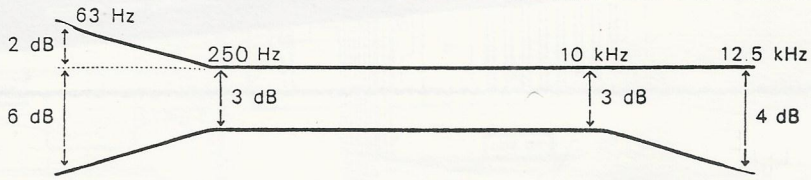	
EQUALIZATION	Normal: t_1=3,180μsec., t_2=120μsec. Chrome and metal: t_1=3,180μsec., t_2=70μsec.	
SIGNAL TO NOISE RATIO	46 dB or better (With MTT-112B test tape)	
TAKE-UP TORQUE	50 to 73 g-cm	
DOLBY NR CIRCUIT		
DOLBY PROCESSOR FREQUENCY RESPONSE	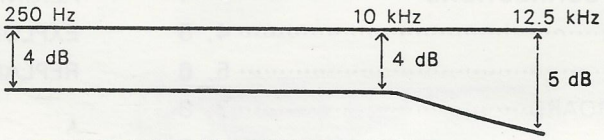	
DOLBY LEVEL	300 mV ± 1 dB	
(COMMON SECTION)		
LOAD IMPEDANCE	10k ohm (RCA termi.) 4 ohm (Speaker termi.)	
OUTPUT POWER	5 watts×4 (THD=10%)	
POWER INPUT VOLTAGE	12-volt car battery, negative terminal to ground 13.2 VDC	
CURRENT	Approx. 2 ampere (0.5 watt×4)	
SEMICONDUCTOR	13 ICs, 42 Transistors, 31 Diodes	
DIMENSIONS	178(W)×50(H)×150(D)mm (7", 1-31/32", 5-29/32")	
WEIGHT	Unit—1.5 kg (3.3 lbs.)	

COMPOSITIONS

K11R (CE-6633EX1)

ITEM \ MODEL	Stock No.	Q'ty
Main unit	CE-6633	1
Owners manual	RN-MXK-1027A	1
Case	RN-MZF-5103	1
Escutcheon	RN-MDP-1837A	1
Bracket	RN-MBF-1040	1
Spacer	RN-MSE-1812	1
Wiring assembly	RN-EWJ-1744	1
Connector	RN-EJZ-173	1
Bolt	RN-MBW-C4×10S	1
Special screw	RN-MET-1328	1
Screw	RN-MET-144	2
Screw	RN-MTN-A6×16	2
Nut	RN-MNR-D6S	2

COMPOSITIONS

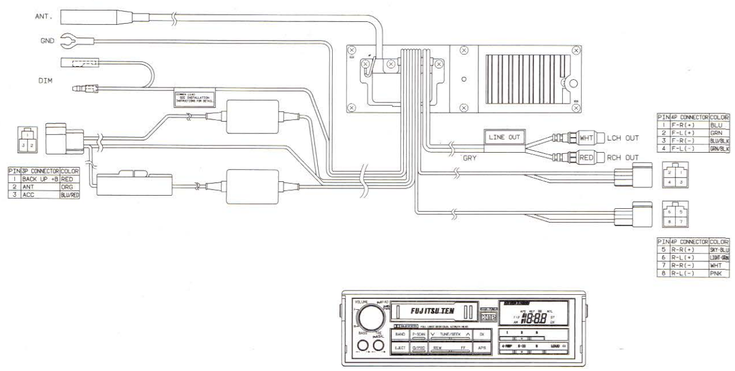

Fig. 1

EXPLODED VIEW

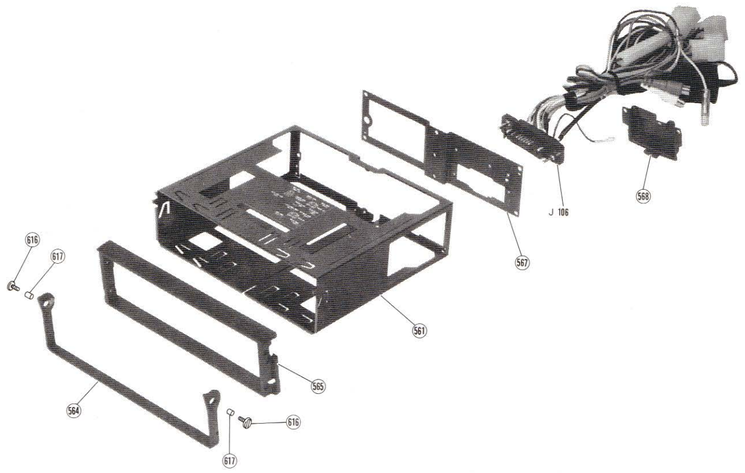

Fig. 2

EXPLODED VIEW

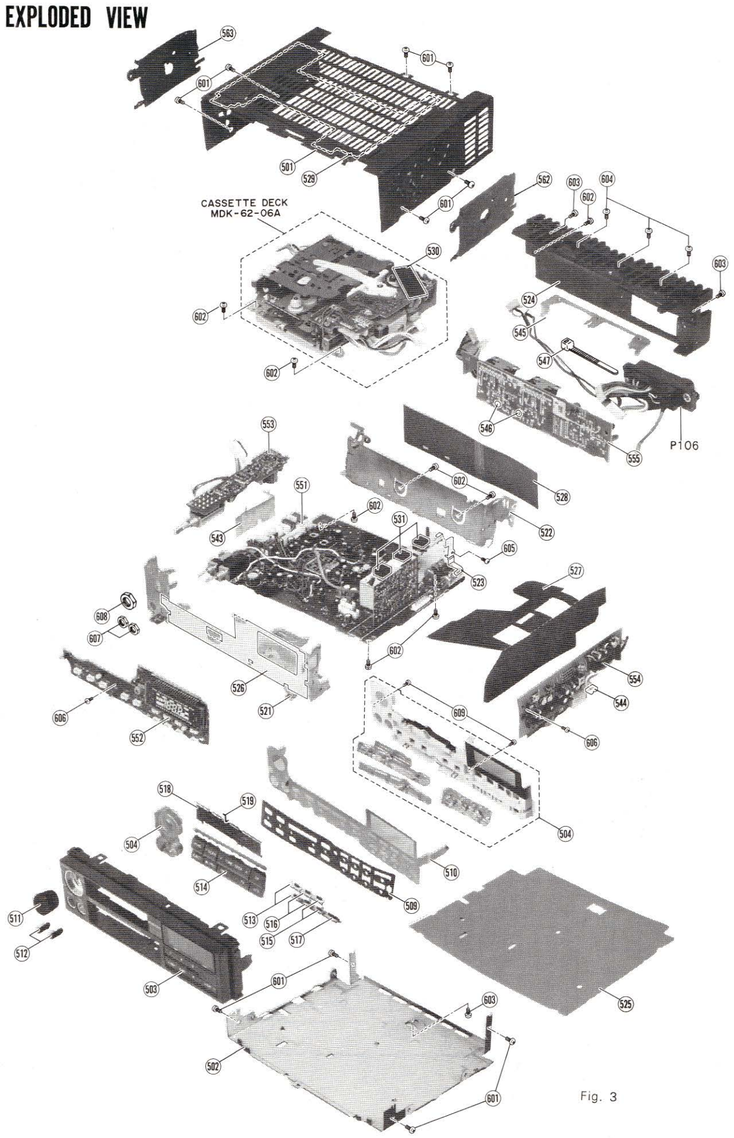

Fig. 3

SCHEMATIC CE6633 TEN

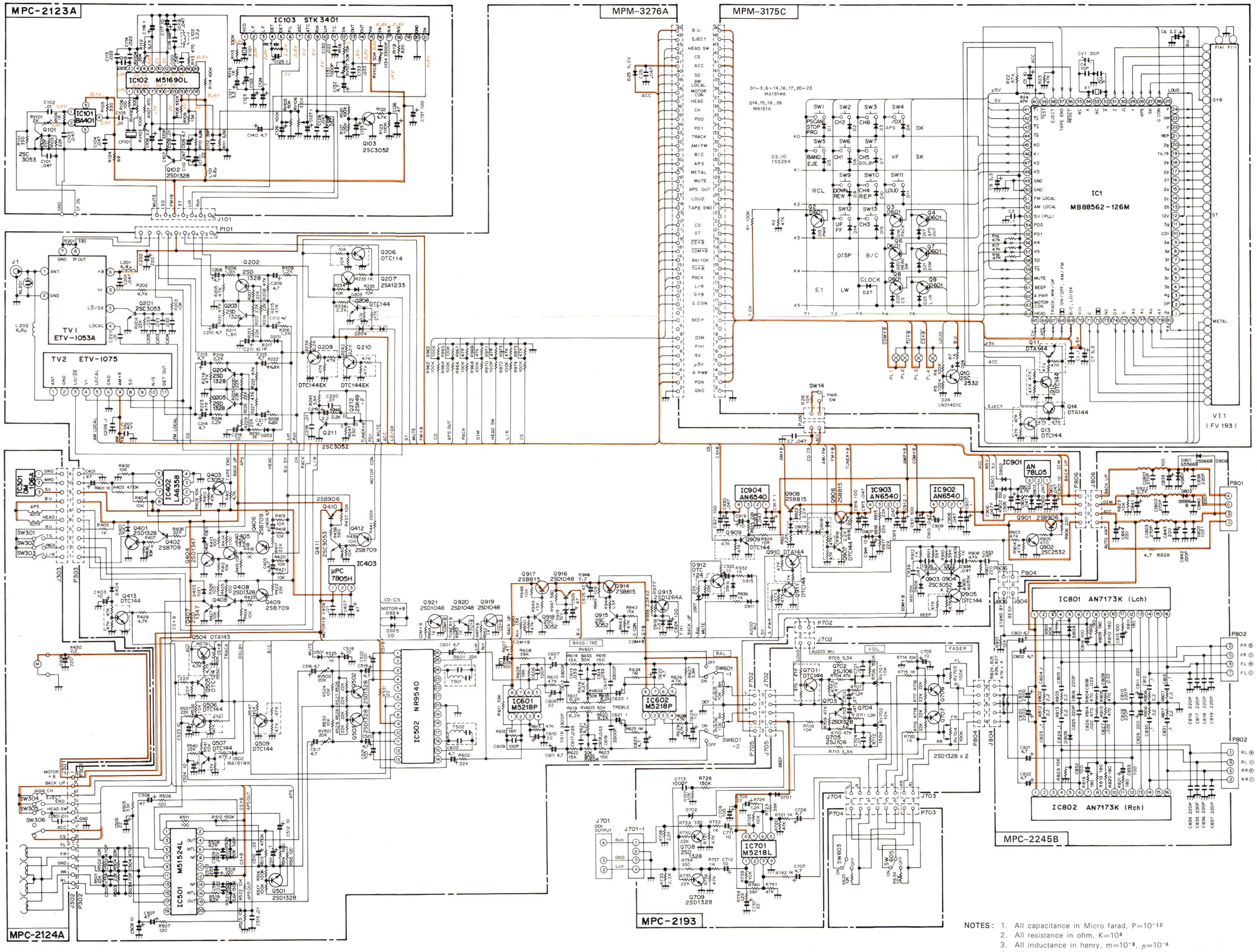

NOTES:
1. All capacitance in Micro farad, $P=10^{-12}$
2. All resistance in ohm, $K=10^{3}$
3. All inductance in henry, $m=10^{-3}$, $\mu=10^{-6}$
4. DC voltages against the chassis measured with 10M ohms digital volt meter, power supply set at +13.2 VDC, no signal input.

Fig. 4

WIRING ON PC BOARD CE 6633 TEN

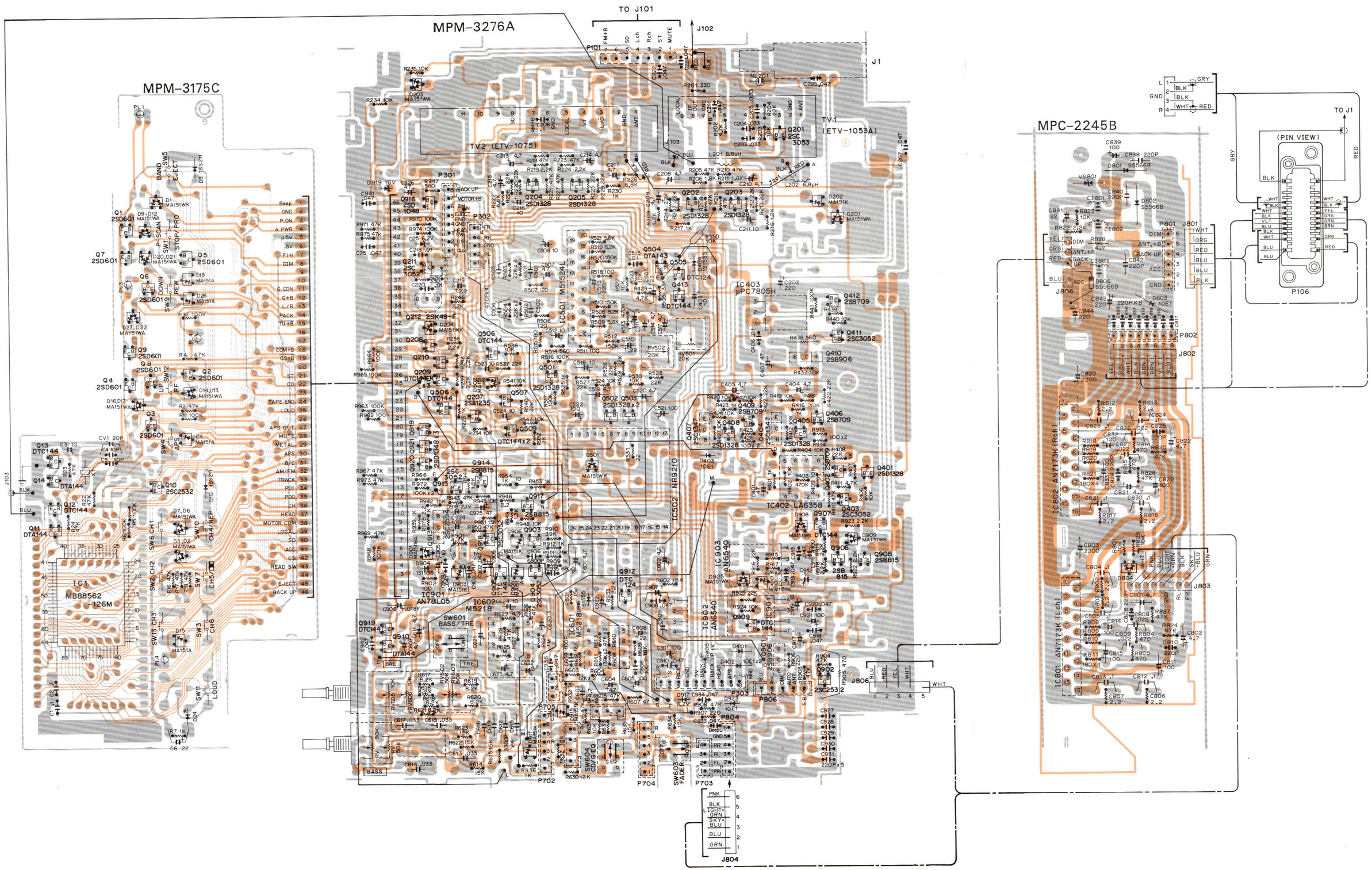

Fig. 4

WIRING ON PC BOARD

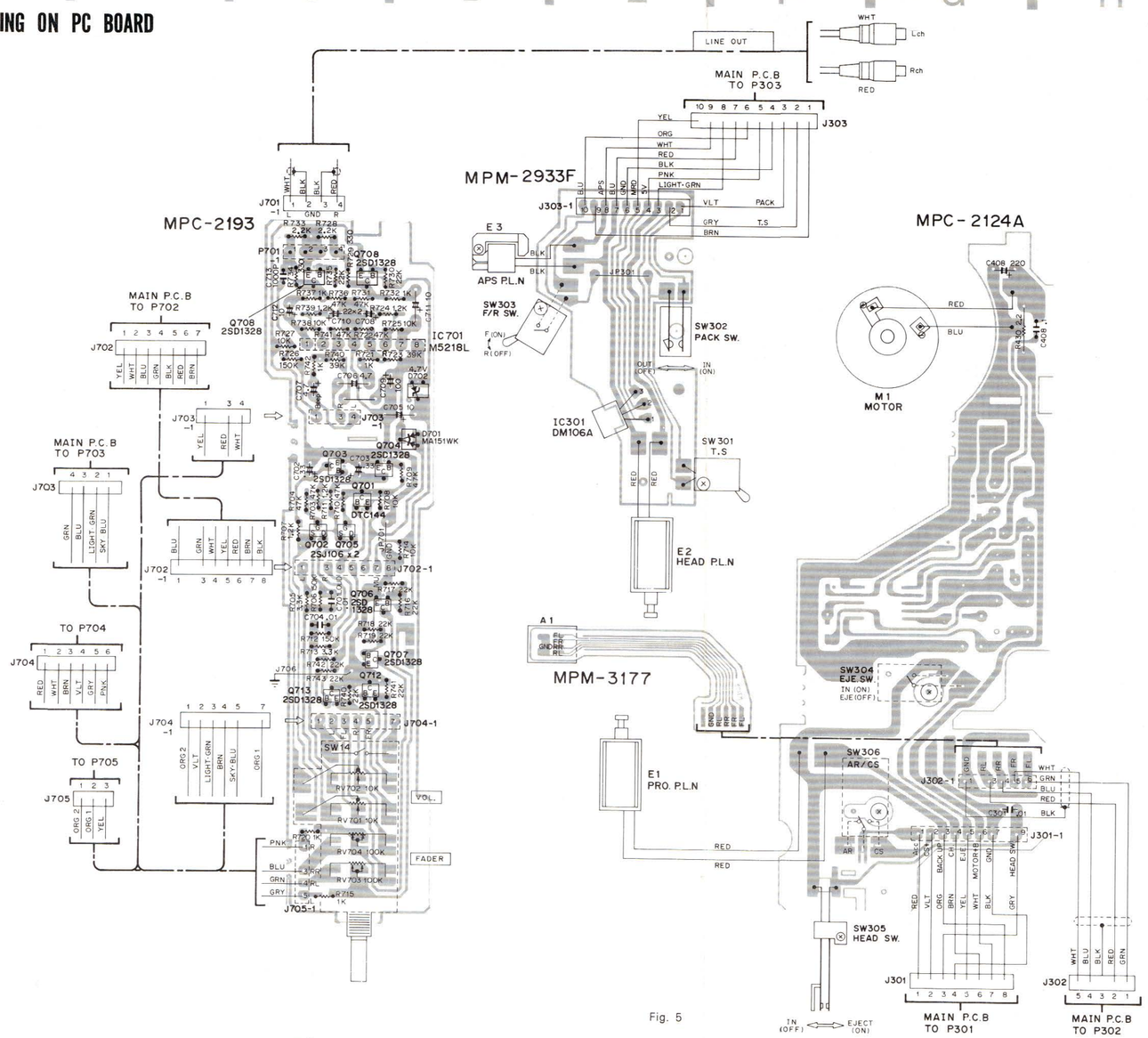

Fig. 5

ALIGNMENT

Standard adjustment condition

a. Power supply ·····13.2V
b. AM/FM changing switch ·····FM
c. DX switch ·····ON
d. Balance ·····Center
e. Bass/treble ·····Center
f. Volume ····· Adjust to get 1.4V output level.
g. Connections

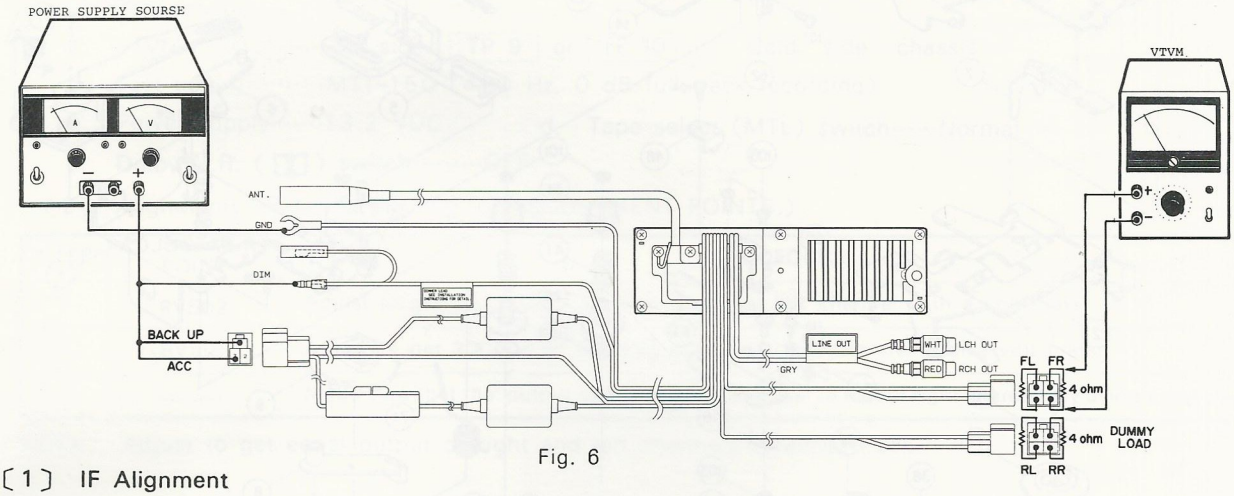

Fig. 6

〔1〕 IF Alignment

(1) Connections

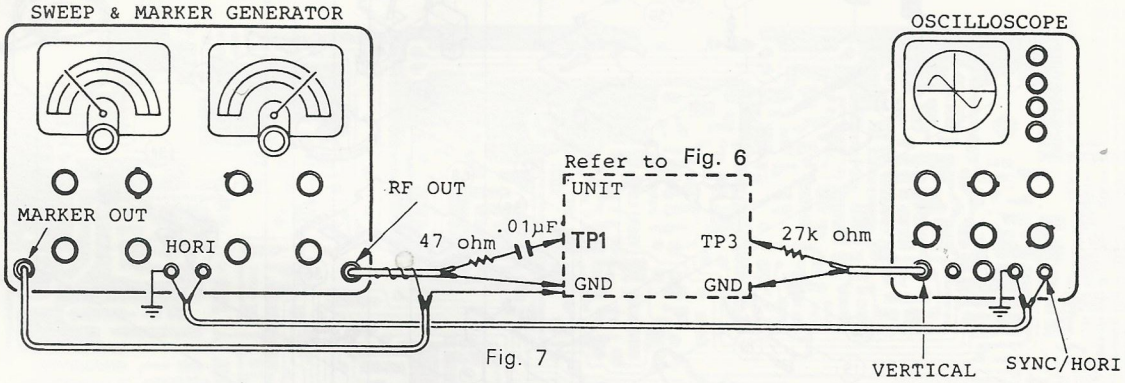

Fig. 7

SWEEP GENERATOR OUTPUT	OSCILLOSCOPE VERTICAL INPUT	OSCILLOSCOPE HORIZONTAL INPUT
Antenna receptacle (J1) TP 1	Connect TP 3 in Fig. 14 through 27K-ohm resistor	Connect with HORIZONTAL terminal of sweep generator

(2) Alignment (Refer to Fig. 10)

STEP	PURPOSE	SWEEP GENERATOR FREQUENCY	ADJUSTMENT POINTS	PROCEDURE
1	S curve	10.7 MHz	T 1	Adjust for full gain and length of s-curve at linears. (See Fig. 8)
2	S curve (Center)	SG 10.7 MHz (400 Hz, 30%)		Fine-adjust the potential difference between IC 1 ⑦ and ⑱ pins for 0V.

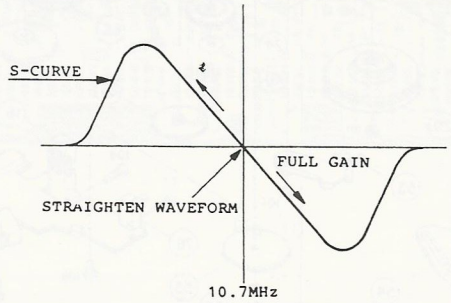

Fig. 8

NOTE: S curve center can be adjusted in the same manner by receiving local FM broadcast near 98.1 MHz.

[2] Limiting sensitivity alignment

(1) Connections

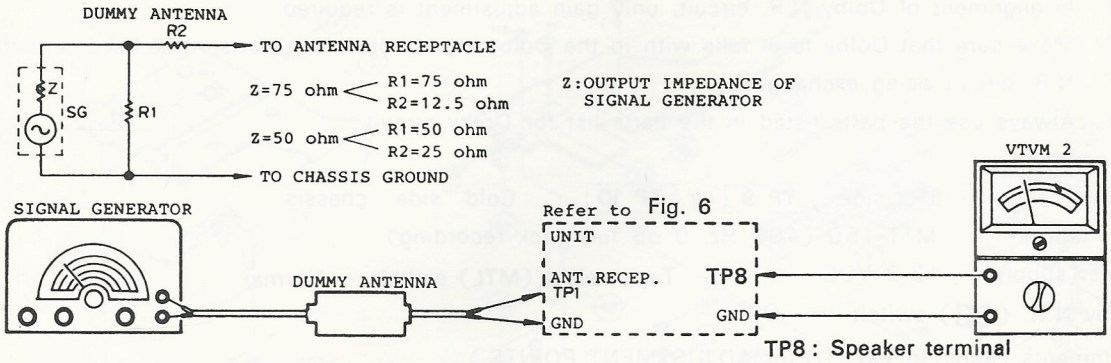

Fig. 9

(2) Alignment (Refer to Fig. 10)

STEP	SIGNAL GENERATOR FREQUENCY	SIGNAL GENERATOR OUTPUT LEVEL	ADJUSTMENT POINT	PROCEDURE
1	98.1 MHz (400Hz, 30%)	54 dBμ	———	Adjust volume control (VOL) until TP 8 output voltage is 1.4V.
2		10±5 dBμ	RV 1	Adjust output voltage for −3 dB (1V).

[3] SEEK Alignment

(1) Connections Refer to Fig. 9

(2) Alignment

STEP	PURPOSE	SIGNAL GENERATOR FREQUENCY	SIGNAL GENERATOR OUTPUT LEVEL	ADJUSTMENT POINT	PROCEDURE
1	Set the local/distant selector switch in the local position.				
2	Local sensitivity	98.1 MHz (400 Hz, 30%)	45 dBμ (±6 dBμ)	RV 5	Depress SEEK button to actuate the searching, and then adjust sensitivity so that the searching action may stop nearly at 98.1 MHz.

[4] ASC Working sensitivity alignment

(1) Connections Refer to Fig. 9

(2) Alignment (Refer to Fig. 10)

STEP	SIGNAL GENERATOR FREQUENCY	SIGNAL GENERATOR OUTPUT LEVEL	ADJUSTMENT POINT	PROCEDURE
1	98.1 MHz (1 kHz, 30%)	54 dBμ	———	Adjust volume control (VOL) until TP 8 output voltage is 1.4V.
2		30 dBμ	RV 4	Adjust the separation for 10 dB.

[5] Noise blanker alignment

(1) Connections a. Stereo signal generator·····Connect the TP 1

b. Oscilloscope ·····Connect the TP 5

(2) Alignment (Refer to Fig. 10)

STEP	STEREO SIGNAL GENERATOR FREQUENCY	STEREO SIGNAL GENERATOR OUTPUT LEVEL	ADJUSTMENT POINT	PROCEDURE
1	98.1 MHz (Stereo mode, No modulation)	54 dBμ	RV 3	After making sure of "STEREO" display, adjust the pilot signal wave (19 kHz) for minimum.

[6] Separation alignment

(1) Connections a. Stereo signal generator·····Connect the TP 1

b. Oscilloscope ·····Connect the TP 8 (L-ch)

(2) Alignment (Refer to Fig. 10)

STEP	STEREO SIGNAL GENERATOR FREQUENCY	STEREO SIGNAL GENERATOR OUTPUT LEVEL	ADJUSTMENT POINT	PROCEDURE
1	98.1 MHz (R-ch : 1 kHz, 30% L-ch : no modulation)	54 dBμ	RV 2	Adjust L-ch output level for minimum.

DOLBY NR LEVEL ALIGNMENT

NOTES: 1. Always use the test tape (MTT-150) for alignment.
2. In alignment of Dolby N.R. circuit, only gain adjustment is required
3. Make sure that Dolby level falls with in the Dolby standards, when parts in the head or Dolby N.R. circuit being exchanged.
4. Always use the parts listed in the parts list for Dolby circuit.

(1) Connections

a. VTVM·····Hot side: TP 9 or TP 10 Cold side: chassis

b. Test tape ·····MTT-150 (400 Hz, 0 dB full track recording)

c. Power supply ·····13.2 VDC d. Tape select (MTL) switch·····Normal

e. Dolby N.R. (DD) switch·····OFF

(2) Alignments (Refer to Fig. 10 for ADJUSTMENT POINTS.)

STEP	ADJUSTMENT POINT	PROCEDURE
1	RV502	Adjust to get 300 mV (±30 mV) output of left channel with a volt meter.
2	RV501	Adjust to get 300 mV (±30 mV) output of right channel with a volt meter.
3	———	Make sure that the output of left channel is equal to that of right channel, by using a volt meter.

NOTE: Adjust to get equal output of right and left channels in either track.

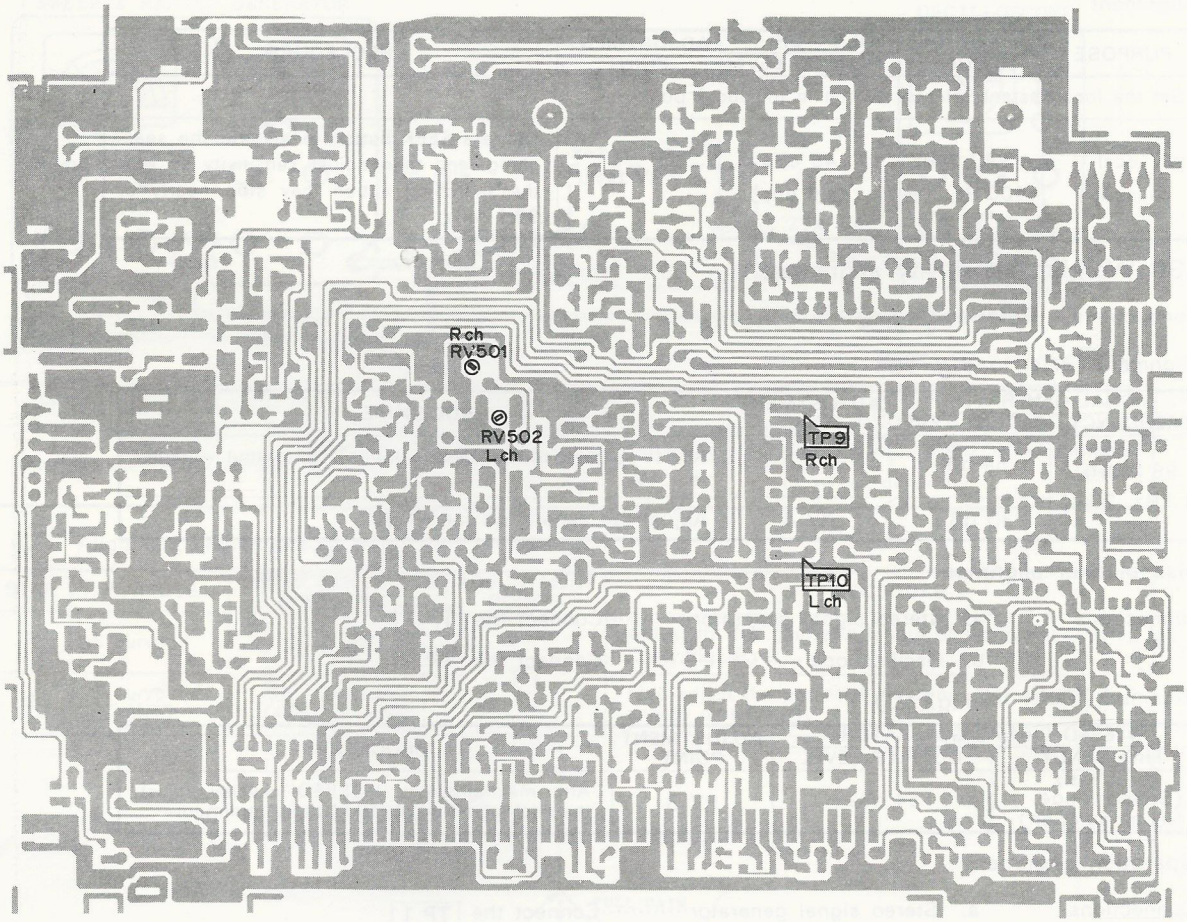

Fig. 10

EXPLODED VIEW (CASSETTE DECK) MDK-62-06B

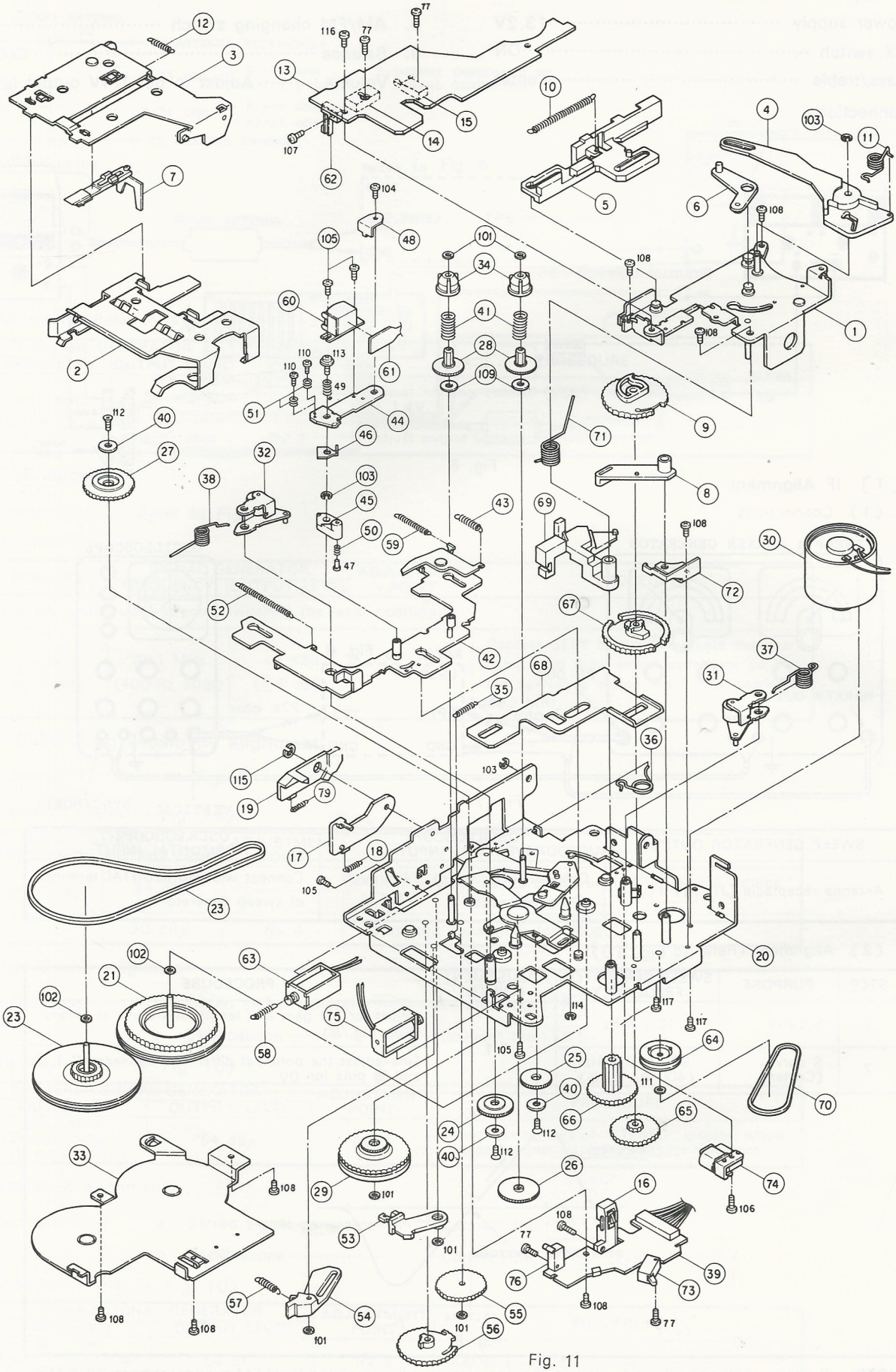

Fig. 11

REPLACEMENT PARTS LIST

Note:Main replacement parts are marked O in the remarks column.

Symbol. No.	Stock No.	Parts name	Description Chip:(C)	Remark
CAPACITORS			Unit:μF, P=pF	
C1,2	RN-ECK-C2F104ZYEPC/Y	Ceramic	.1 25 V (C)	
C3	RN-ECE-M100V16-9	Electrolytic	10 16 V	
C4.5	RN-ECC-C2CH100DYHPB/Y	Ceramic	10 p 50 V (C)	
C6	RN-ECY-M2R2V16-M1	Tantalum	2.2 16 V	
C7,8,121	RN-ECE-M3R3V50-3	Electrolytic	3.3 50 V	
C25,101 103.104,110 118	RN-ECK-CB1H473M-1/TY	Ceramic	.047 50 V (C)	
C102,105,108 220,221,406 515,701,704	RN-ECK-C2B103KYHPC/Y	Ceramic	.01 50 V (C)	
C106	RN-ECE-M2R2V50-7	Electrolytic	2.2 50 V	
C109,132,140 208-210 212-215,217 404,405	RN-ECE-M4R7V25-901/TT	Electrolytic	4.7 25 V	
C111,137,521 522,605,709	RN-ECE-M101V10-42	Electrolytic	100 10 V	
C113,114,115 130	RN-ECK-C2B223KYHPC/Y	Ceramic	.022 50 V (C)	
C116	RN-ECE-M1R0V50-6	Electrolytic	1 50 V	
C117	RN-ECE-M100V16-10	Electrolytic	10 16 V	
C119	RN-ECC-DCH680JY	Ceramic	68 p 50 V	
C122,511	RN-ECE-MR22V50-4	Electrolytic	.22 50 V	
C123-125,127 135	RN-ECE-M1R0V50-7	Electrolytic	1 50 V	
C126,608,610	RN-ECE-M220V10-5	Electrolytic	22 10 V	
C128,129	RN-ECF-R333V50-JC	Mylar	.033 50 V	
C131,713	RN-ECC-CCH1H102J-1/TY	Ceramic	1000p 50 V (C)	
C133	RN-ECK-CB1H153K-1/TY	Ceramic	.015 50 V (C)	
C134	RN-ECK-C2B332KYHPC/Y	Ceramic	3300p 50 V (C)	
C136,407	RN-ECE-M470V10-10	Electrolytic	47 10 V	
C201,207	RN-ECK-C2F473ZYEPC/Y	Ceramic	.047 25 V (C)	
C203,204,205	RN-ECK-CB1H333K-1/TY	Ceramic	.033 50 V (C)	
C206	RN-ECK-CF1E104K-1/TY	Ceramic	.1 25 V (C)	
C211,216,403 516,517,518 519,520,523 524	RN-ECE-M100V16-10	Electrolytic	10 16 V	
C408,513	RN-ECE-M221V10-11	Electrolytic	220 10 V	
C501,502,503 504	RN-ECF-R471V50-JZ	Mylar	470 p 50 V	
C505	RN-ECE-M220V16-8	Electrolytic	22 16 V	
C506,507	RN-ECE-M470V10-901/TT	Electrolytic	47 10 V	
C508,512,711 712	RN-ECE-M100V16-901/TT	Electrolytic	10 16 V	
C509,514	RN-ECF-R223V50-JZ	Mylar	.022 50 V	
C510	RN-ECE-MR10V50-4	Electrolytic	.1 50 V	
C601-604,607 611,622,623 524,706,707 801,802,821 822	RN-ECE-M100V16-10	Electrolytic	10 16 V	
C606,609	RN-ECK-C2B101KYHPC/Y	Ceramic	100 p 50 V (C)	
C612,615,616 619	RN-ECF-R472V50-JZ	Mylar	4700p 50 V	
C613,614,617 618	RN-ECF-R473V50-JZ	Mylar	.047 50 V	
C620,621	RN-ECE-M1R0V50-901	Electrolytic	1 50 V	
C702,703	RN-ECE-MR47V50-901	Electrolytic	.47 50 V	
C708,710	RN-ECE-M220V10-901	Electrolytic	22 10 V	
C803,820	RN-ECE-M222V16-18	Electrolytic	2200 16 V	
C804,805,812 813,823,824 830,831	RN-ECF-R104V50-JZ	Mylar	.1 50 V	
C806,810 816-819,825 828,834-837	RN-ECC-C2SL221JYHPB/Y	Ceramic	220 p 50 V (C)	
C808,809,826 827	RN-ECF-R223V50-JZ	Mylar	.022 50 V	
C811,829,839	RN-ECE-M101V16-19	Electrolytic	100 16 V	
C814,815,832 833	RN-ECE-M101V10-9	Electrolytic	100 10 V	
C838,840,842	RN-ECK-DB221KY	Ceramic	220 p	
C841	RN-ECE-M220V16-9	Electrolytic	22 16 V	
C843,844	RN-ECE-M221V16-6	Electrolytic	220 16 V	
C901,905,914 919,922,923	RN-ECE-M100V16-10	Electrolytic	10 16 V	
C902,903,904 908,910,913 915,918,920	RN-ECK-CB1E473K-1/TY	Ceramic	.047 25 V (C)	
C906	RN-ECX-C183V05-12	Super-capacitor	.18 5 V	
C907,909,912 917	RN-ECE-M1R0V50-7	Electrolytic	1 50 V	
C911,916,921 924	RN-ECE-M101V10-42	Electrolytic	100 10 V	
C925,926	RN-ECE-M470V16-11	Electrolytic	47 16 V	
C933,934	RN-ECK-C2F473ZYEPC/Y	Ceramic	.047 25 V (C)	
C935,936	RN-ECK-C2B682KYHPC/Y	Ceramic	6800p 50 V (C)	
CV1	RN-ECV-A20-70	Trimmer	20P	
RESISTORS			Unit:ohm, K=kohm	
R1,5,6,108 114,120,121 123	RN-ERG-I2B104JR-1/Y	Metallic	100K 5% 1/10W (C)	
R2,16-18,22 23	RN-ERG-I2B473JR-1/Y	Metallic	47K 5% 1/10W (C)	
R7,104,116	RN-ERG-I2B102JR-1/Y	Metallic	1 K 5% 1/10W (C)	

Symbol. No.	Stock No.	Parts name	Description	Remark
			Chip:(C)	
R101,105	RN-ERG-I2B331JR-1/Y	Metallic	330 5% 1/10W (C)	
R102,103	RN-ERG-I2B223JR-1/Y	Metallic	22 K 5% 1/10W (C)	
R106	RN-ERG-IC101J-1/TY	Metallic	100 5% 1/8W (C)	
R109,118	RN-ERG-I2B153JR-1/Y	Metallic	15 K 5% 1/10W (C)	
R110	RN-ERG-IC682J-1/TY	Metallic	6.8K 5% 1/8W (C)	
R111	RN-ERG-I2B682JR-1/Y	Metallic	6.8K 5% 1/10W (C)	
R112	RN-ERG-IC912J-1/TY	Metallic	9.1K 5% 1/8W (C)	
R113	RN-ERG-I2B471JR-1/Y	Metallic	470 5% 1/10W (C)	
R115	RN-ERG-I2B334JR-1/Y	Metallic	330K 5% 1/10W (C)	
R117	RN-ERG-I2B183JR-1/Y	Metallic	18 K 5% 1/10W (C)	
R118,601,602 631,633	RN-ERG-I2B153JR-1/Y	Metallic	15 K 5% 1/10W (C)	
R119	RN-ERG-I2B821JR-1/Y	Metallic	820 5% 1/10W (C)	
R122	RN-ERG-I2B472JR-1/Y	Metallic	4.7K 5% 1/10W (C)	
R124	RN-ERG-I2B680JR-1/Y	Metallic	68 5% 1/10W (C)	
R201,247	RN-ERG-I2B331JR-1/Y	Metallic	330 5% 1/10W (C)	
R202,411,429 617-620	RN-ERG-I2B472JR-1/Y	Metallic	4.7K 5% 1/10W (C)	
R203,234,235 402,404,406 409,412,415 418-421,424 427,437,439 440	RN-ERG-I2B103JR-1/Y	Metallic	10 K 5% 1/10W (C)	
R204,207,208 212,213,215 220,225,226 229,408,417 422	RN-ERG-I2B223JR-1/Y	Metallic	22 K 5% 1/10W (C)	
R205,210,218 221,223,227 410,605,606 610,613,626 628	RN-ERG-I2B473JR-1/Y	Metallic	47 K 5% 1/10W (C)	
R206,211	RN-ERG-I2B182JR-1/Y	Metallic	1.8K 5% 1/10W (C)	
R209,216	RN-ERG-I2B122JR-1/Y	Metallic	1.2K 5% 1/10W (C)	
R219,224,236 242,246,978	RN-ERG-I2B222JR-1/Y	Metallic	2.2K 5% 1/10W (C)	
R222,228	RN-ERG-I2B682JR-1/Y	Metallic	6.8K 5% 1/10W (C)	
R230,233,401 405,407,416 423,525	RN-ERG-I2B102JR-1/Y	Metallic	1 K 5% 1/10W (C)	
R403	RN-ERG-I2B474JR-1/Y	Metallic	470K 5% 1/10W (C)	
R413,414,425 426,511	RN-ERG-I2B101JR-1/Y	Metallic	100 5% 1/10W (C)	
R438	RN-ERG-AG561J	Metallic	560 5% 1W	
R441,516,517 938,962,963 964,965,966 968,970,972 974	RN-ERG-I2B104JR-1/Y	Metallic	100K 5% 1/10W (C)	
R501,502,503	RN-ERG-IC223J-1/TY	Metallic	22 K 5% 1/8W (C)	

Symbol. No.	Stock No.	Parts name	Description	Remark
			Chip:(C)	
504	RN-ERG-IC223J-1/TY	Metallic	22 K 5% 1/8W (C)	
R505	RN-ERG-I2B333JR-1/Y	Metallic	33 K 5% 1/10W (C)	
R506,507	RN-ERG-I2B121JR-1/Y	Metallic	120 5% 1/10W (C)	
R508,519,615 623	RN-ERG-I2B822JR-1/Y	Metallic	8.2K 5% 1/10W (C)	
R509,521	RN-ERG-I2B562JR-1/Y	Metallic	5.6K 5% 1/10W (C)	
R510,520	RN-ERG-IC154J-1/TY	Metallic	150K 5% 1/8W (C)	
R512	RN-ERG-I2B154JR-1/Y	Metallic	150K 5% 1/10W (C)	
R513	RN-ERG-IC474J-1/TY	Metallic	470K 5% 1/8W (C)	
R515	RN-ERG-I2B181JR-1/Y	Metallic	180 5% 1/10W (C)	
R518	RN-ERG-IC101J-1/TY	Metallic	100 5% 1/8W (C)	
R522,523,524 530,536,541 547	RN-ERG-I2B103JR-1/Y	Metallic	10 K 5% 1/10W (C)	
R526,527,528 529,537,540 609,612,716 717,718,719 730,735	RN-ERG-I2B223JR-1/Y	Metallic	22 K 5% 1/10W (C)	
R603,604	RN-ERG-I2B123JR-1/Y	Metallic	12 K 5% 1/10W (C)	
R607	RN-ERG-I2B470JR-1/Y	Metallic	47 5% 1/10W (C)	
R608,611,723	RN-ERG-I2B393JR-1/Y	Metallic	39 K 5% 1/10W (C)	
R614,616,621 622	RN-ERG-IC822J-1/TY	Metallic	8.2K 5% 1/8W (C)	
R624,625	RN-ERG-I2B105JR-1/Y	Metallic	1 M 5% 1/10W (C)	
R627	RN-ERG-I2B392JR-1/Y	Metallic	3.9K 5% 1/10W (C)	
R629	RN-ERG-IC472J-1/TY	Metallic	4.7K 5% 1/8W (C)	
R703,704,709 710,722,731 736,741	RN-ERG-I2B473JR-1/Y	Metallic	47 K 5% 1/10W (C)	
R705,713	RN-ERG-I2B392JR-1/Y	Metallic	3.9K 5% 1/10W (C)	
R708,714,725 727,738	RN-ERG-I2B103JR-1/Y	Metallic	10 K 5% 1/10W (C)	
R721,722,732 737,912,932 936,939,952 953,954	RN-ERG-I2B102JR-1/Y	Metallic	1 K 5% 1/10W (C)	
R726	RN-ERG-I2B154JR-1/Y	Metallic	150K 5% 1/10W (C)	
R728,733	RN-ERG-I2B222JR-1/Y	Metallic	2.2K 5% 1/10W (C)	
R729,734	RN-ERG-I2B331JR-1/Y	Metallic	330 5% 1/10W (C)	
R801,823,924 945,948	RN-ERG-I2B103JR-1/Y	Metallic	10 K 5% 1/10W (C)	
R802,803,806 807,812,813 816,817,946	RN-ERG-I2B2R2JR-1/Y	Metallic	2.2 5% 1/10W (C)	
R804,805,814 815	RN-ERG-I2B471JR-1/Y	Metallic	470 5% 1/10W (C)	
R808,809,810 811,818,819 820,821	RN-ERG-I2B181JR-1/Y	Metallic	180 5% 1/10W (C)	
R822,918,919 922,923,933	RN-ERG-I2B222JR-1/Y	Metallic	2.2K 5% 1/10W (C)	

Symbol. No.	Stock No.	Parts name	Description Chip:(C)	Remark
R824,825,826 827,903,904 908,943,950 967,969,971 973,975	RN-ERG-I2B473JR-1/Y	Metallic	47 K 5% 1/10W (C)	
R901	RN-ERG-I2B472JR-1/Y	Metallic	4.7K 5% 1/10W (C)	
R902	RN-ERG-I2B101JR-1/Y	Metallic	100 5% 1/10W (C)	
R905	RN-ERG-AG471J-1	Metallic	470 5% 1W	
R906	RN-ERG-IC221J-1/TY	Metallic	220 5% 1/8W (C)	
R907	RN-ERG-I2B221JR-1/Y	Metallic	220 5% 1/10W (C)	
R910,911	RN-ERG-I2B393JR-1/Y	Metallic	39 K 5% 1/10W (C)	
R915,916,917 925	RN-ERG-I2B223JR-1/Y	Metallic	22 K 5% 1/10W (C)	
R942,949,951	RN-ERG-I2B153JR-1/Y	Metallic	15 K 5% 1/10W (C)	
R944	RN-ERG-I2B152JR-1/Y	Metallic	1.5K 5% 1/10W (C)	
R947	RN-ERG-I2B561JR-1/Y	Metallic	560 5% 1/10W (C)	
RV101	RN-ERV-ON1-309	Variable	2K	○
RV102	RN-ERV-ON1-307	Variable	300	○
RV103	RN-ERV-ON1-222	Variable	20K	○
RV104	RN-ERV-ON1-280	Variable	20K	○
RV105-108	RN-ERV-ON1-281	Variable	50K	○
RV501,502	RN-ERV-ON1-312	Variable	20K	○
RV601,604	RN-ERV-1N2-1004	Variable	50K X 2 BASS	○
RV602,603,605 606	RN-ERV-1N4-1001	Variable	50K X 2 TRE.,10K X 2 BAL.	○
RV701-704	RN-ERV-1P4-1002	Variable	10K X 2 VOL.,100K X 2 FAD	○
SEMICONDUCTORS				
D1-3,6,7,9-14 16,17,20-23 203,901	RN-EDS-MA151WA/TY	Silicon diode	Mark:MN (C)	○
D4,15,18,26	RN-EDS-MA151A/TY	Silicon diode	Mark:MA (C)	○
D5,10	RN-EDS-1SS211	Silicon diode		○
D24	RN-EDP-LN01401C	LED		○
D25,917	RN-EDT-RD6R2EB2	Zener diode	6.2V	○
D201,204,502 701,908,909 925	RN-EDS-MA151WK/TY	Silicon diode	Mark:MT (C)	○
D202,903,905 906,907,911 915	RN-EDS-MA151K/TY	Silicon diode	Mark:MH (C)	○
D401,402,403 801,802,803 923	RN-EDS-10E1	Silicon diode		○
D404,916	RN-EDS-1S1555	Silicon diode		○
D702	RN-EDT-RD4R7MB/TY	Zener diode	4.7V	○
D918	RN-EDT-RD2R4EB	Zener diode	2.4V	○
D919	RN-EDT-RD16EB2	Zener diode	16V	○
IC1	RN-EIM-MB88562-126M	Digital-monolithic IC		○
IC101	RN-EIC-BA401	Linear-monolithic IC		○
IC102	RN-EIC-M51690L-Z	Linear-monolithic IC	FM IF	○

Symbol. No.	Stock No.	Parts name	Description Chip:(C)	Remark
IC103	RN-EIE-STK3401	Hybrid IC	N/B,MPX	○
IC402	RN-EIC-LA6358	Linear-monolithic IC	OP. AMP.	○
IC403	RN-EIC-UPC7805H	Linear-monolithic IC	V. REG.	○
IC501	RN-EIC-M51524L	Linear-monolithic IC	EQ. AMP.	○
IC502	RN-EIE-NR9210	Hybrid IC	DOLBY	○
IC601,602,701	RN-EIC-M5218P	Linear-monolithic IC	PRE. AMP.	○
IC801,802	RN-EIC-AN7173K	Linear-monolithic IC	POWER AMP.	○
IC901	RN-EIC-AN78L05	Linear-monolithic IC	V. REG.	○
IC902,903,904	RN-EIC-AN6540	Linear-monolithic IC	V. REG.	○
Q1,2,3,4,6,7 8,9	RN-EVS-2SD601-RS/TY	Silicon transistor	Mark:YR,YS (C)	○
Q10	RN-EVS-2SC2532/TZ	Silicon transistor	Mark:AN (C)	○
Q11,14	RN-EVS-DTA144EK/TZ	Silicon transistor	Mark:16 (C)	○
Q12,13,208 209,210	RN-EVS-DTC144EK/TY	Silicon transistor	Mark:26 (C)	○
Q101,201	RN-EVS-2SC3053-C/TY	Silicon transistor	Mark:FC (C)	○
Q102,202,203 204,205	RN-EVS-2SD1328-ST/TY	Silicon transistor	Mark:1DS,1DT (C)	○
Q103,211,903 904,915,918	RN-EVS-2SC3052-FG/TY	Silicon transistor	Mark:LF,LG (C)	○
Q206	RN-EVS-DTC114EK/TY	Silicon transistor	Mark:24 (C)	○
Q207	RN-EVS-2SA1235-FG/TY	Silicon transistor	Mark:MF,MG (C)	○
Q212	RN-EVF-2SK49-F	FET		○
Q401,405,408 501-503	RN-EVS-2SD1328-ST/TY	Silicon transistor	Mark:1DS,1DT (C)	○
Q402,406,410 412	RN-EVS-2SB709-QR/TY	Silicon transistor	Mark:AQ,AR (C)	○
Q403,411	RN-EVS-2SC3052-FG/TY	Silicon transistor	Mark:LF,LG (C)	○
Q404,407	RN-EVS-2SD1347-TU	Silicon transistor		○
Q410,901	RN-EVS-2SB906-Y	Silicon transistor		○
Q504	RN-EVS-DTA143EK/TY	Silicon transistor	Mark:13 (C)	○
Q505	RN-EVS-DTC124EK/TY	Silicon transistor	Mark:25 (C)	○
Q506,507,509 701,905,907 909,910,911	RN-EVS-DTC144EK/TY	Silicon transistor	Mark:26 (C)	○
Q702,705	RN-EVF-2SJ106-YGB/TZ	FET	Mark:VY,VG,VB (C)	○
Q703,704,706 707,708,709	RN-EVF-2SD1328-RST/TY	FET	Mark:1DR,1DS,1DT (C)	○
Q902	RN-EVS-2SC2532/TY	Silicon transistor	Mark:AN (C)	○
Q906,908,914 917	RN-EVS-2SB815-67/TY	Silicon transistor	Mark:B6,B7 (C)	○
Q912	RN-EVS-DTC124EK/TY	Silicon transistor	Mark:25 (C)	○
Q913	RN-EVS-2SD1264A	Silicon transistor		○
Q916,919-921	RN-EVS-2SD1048-78/TY	Silicon transistor	Mark:X7,X8 (C)	○
MISCELLANEOUS ELECTRICAL				
CF101	RN-EFC-F2-114	Ceramic filter		
CI801,803	RN-ECI-B271-2	Filter		
CI802,804	RN-ECI-A271-1	Filter		
J1	RN-EJA-1003	Antenna receptacle	ANT. JACK	

Symbol. No.	Stock No.	Parts name	Description Chip:(C)	Remark
J101	RN-EJU-S07W-752	Connector	7P	
J102	RN-EWI-1070A	Lead assembly		
J103	RN-EWI-1072	Lead assembly		
J106	RN-EWJ-5086A	Lead assembly	24P-4P-4P-3P-RCA	
J201	RN-EWI-1071	Lead assembly		
J701	RN-EWJ-4992	Lead assembly	DECK OUTPUT	
J702	RN-EWJ-1078	Lead assembly	8P-7P	
J703,704,705	RN-EWI-1077A	Lead assembly	16P-11P-4P-13P-10P-4P	
J706	RN-EWI-1105	Lead assembly		
J801,802	RN-EWI-1108A	Lead assembly		
J803,804,805	RN-EWI-1141	Lead assembly	8P-6P-5P-5P	
806				
L101	RN-ELH-C220-5	Choke	22mH	
L102,201,202	RN-ELH-C6R8-KAL	Choke	6.8uH	
NL201	RN-EPN-1002	Neon lamp		
P1-1	RN-EJU-S05V-564G	Connector	5P	
P2-1	RN-EJU-S02V-561L	Connector	2P	
P2-2	RN-EJU-S04V-563L	Connector	4P	
P2	RN-EWJ-4993	Lead assembly	DECK INPUT	
P3	RN-EWJ-4907	Lead assembly	CD INPUT	
P3-1	RN-EJU-S05V-564R	Connector	5P(RED)	
P3-2	RN-EJU-S03V-562R	Connector	3P(RED)	
P101	RN-EJU-S07V-258	Connector	7P	
P106	RN-EWJ-5087A	Lead assembly	24P-8P-6P-4P	
P301	RN-EJU-S08V-945	Connector	8P	
P302	RN-EJU-S05V-942	Connector	5P	
P303	RN-EJU-S10V-947	Connector	10P	
P701	RN-EJU-S04V-563	Connector	4P	
P702	RN-EJU-S07V-944	Connector	7P	
P703	RN-EJU-S04V-941L	Connector	4P(BLU)	
P704,804	RN-EJU-S06V-943R	Connector	6P(RED)	
P705	RN-EJU-S03V-940B	Connector	3P(BLK)	
P801	RN-EJU-S06V-1275	Connector	6P	
P802	RN-EJU-4006-MAW08	Connector	8P	
P806	RN-EJU-S05V-564	Connector	5P	
P807	RN-EWI-1084B	Lead assembly		
PL1-3	RN-EPM-1064	Lamp assembly		○
PL4	RN-EPM-1332	Lamp assembly		○
SW1-13	RN-ESB-1N1-224	Push switch		○
SW601,603,604	RN-ESS-22-1078	Slide switch		○
T101	RN-ETF-1018	FM IF transformer		
TH125	RN-EVR-PTH60T102M	Posister		○
TV1	RN-ETV-1057A	Front end	FM	○
TV2	RN-ETV-1075	Front end	AM	○
VI1	RN-EVI-FV193	Display		○
VS801	RN-EVV-C10DK220	Varistor		○
X1	RN-EXC-1036	Crystal		
X101	RN-EXB-CSB456FG15A	Ceramic oscillator		

Illus. No. (Fig.2,3)	Stock No.	Parts name	Description	Q'ty	Remark
MECHANICAL					
501	RN-MAD-1416	Chassis	Top	1	
502	RN-MAD-1413	Chassis	Bottom	1	
503	RN-MDP-1927C	Escutcheon		1	○
504	RN-MHE-1962	Holder		1	
509	RN-MLC-1239A	Douser		1	
510	RN-MSB-1197B	Shield plate		1	
511	RN-MYC-1093	Knob	VOL,PULL FAD	1	○
512	RN-MYC-1090A	Knob	BASS,TRE,BAL	2	○
513	RN-MYB-2395A	Button	1,4,REP	2	○
514	RN-MYB-2327A	Button	DECK,RADIO	1	○
515	RN-MYB-2397A	Button	3,6	2	○
516	RN-MYB-2396A	Button	2,5,DOLBY	2	○
517	RN-MYB-2398A	Button	LOUD,CLOCK	2	○
518	RN-MCV-1766A	Door		1	
519	RN-MSC-1203	Spring		1	
521	RN-MHE-1891B	Holder		1	
522	RN-MHE-1941	Holder		1	
523	RN-MHE-1942	Holder		1	
524	RN-MRE-1202	Heat-sink	REAR	1	
525	RN-MIP-1544B	Insulater	MAIN PC BOARD	1	
526	RN-MIP-1545A	Insulater	SW PC BOARD	1	
527	RN-MIP-1616	Insulater	FM PC BOARD	1	
528	RN-MIP-1547A	Insulater	AMP PC BOARD	1	
529	RN-MIP-1605A	Insulater	VOL PC BOARD	1	
530	RN-MSE-1651A	Spacer	MOTOR	1	
531	RN-MSE-1810	Spacer	FRONT END	3	
542	RN-MHL-1101	Holder		1	
543	RN-MHL-1101	Holder		4	
544	RN-MCE-1129	Clamp		1	
545	RN-MHE-1893B	Holder		1	
546	RN-MET-253	Special screw		2	
547	RN-MCF-1009	Clamp		1	
551	RN-MPM-3276A	PC board	MAIN	1	
552	RN-MPM-3175C	PC board	SW	1	
553	RN-MPC-2193	PC board	VOL	1	
554	RN-MPC-2123A	PC board	FM IF	1	
555	RN-MPC-2245B	PC board	AM	1	
561	RN-MBE-1932	Bracket		1	
562	RN-MBE-1933	Bracket		1	
563	RN-MBE-1934	Bracket		1	
564	RN-MYH-1002	Grip		1	○
565	RN-MEP-1148	Escutcheon		1	
567	RN-MCM-1087	Cover		1	
568	RN-MCE-1156	Clamp		1	
601	F6-SBD-3X4S-M-ZN2A	Screw	3X4mm (BLK)	19	
602	F6-SBD-3X6S	Screw	3X6mm	9	

Illus. No. (Fig. 2, 3)	Stock No.	Parts name	Description	Q'ty	Remark
603	F6-SBD-3X6S-M-ZN2A	Screw	3X6mm (BLK)	1	
604	F6-SBD-3X8S-M-ZN2A	Screw	3X8mm (BLK)	2	
605	F6-SBD-2X3S	Screw	2X3mm	1	
606	F6-SBD-2.6X6S	Screw	2.6X6mm	2	
607	RN-MEN-1059	Special screw		2	
608	RN-MSN-1	Nut		1	
609	RN-MTJ-1N2.6X6	Screw	2.6X6mm	2	
610	F6-SBD-3X8S-M-ZN2A	Screw	3X8mm	7	
611	F6-SSA-5X8S-M-ZN2A	Screw	5X8mm (BLK)	2	
612	RN-MWP-1124A	Washer		2	
613	F6-SBD-4X12S-M-ZN2A	Screw	4X12mm (BLK)	2	
616	RN-MET-1417	Special screw		2	
617	RN-MST-1156	Spacer		2	

NOTE : 1.Specifications subject to change without prior notice.

CASSETTE DECK (MDK-62-06B)

Illus. No. (Fig.11)	Stock No.	Parts name	Description	Q'ty	Remark
MECHANICAL					
1	RN-MYT-1330A	Sub-chassis		1	
2	RN-MKI-1029	Slide plate assembly		1	
3	RN-MHE-1604H	Holder		1	
4	RN-MUL-1313F	Lever		1	
5	RN-MUL-1314G	Lever		1	
6	RN-MUL-1315B	Lever		1	
7	RN-MUL-1316H	Lever		1	
8	RN-MUL-1318B	Lever		1	
9	RN-MUG-1154E	Gear		1	
10	RN-MSC-1355A	Spring		1	
11	RN-MSC-1356B	Spring		1	
12	RN-MSC-1463	Spring		1	
13	RN-MPC-2124A	PC board		1	
14	RN-ESM-1016	Micro switch	SW306	1	○
15	RN-ESL-1042	Leaf switch	SW304	1	○
16	RN-ESL-1045C	Leaf switch	SW302	1	○
17	RN-MUL-1372E	Lever		1	
18	RN-MSC-1422C	Spring		1	
19	RN-MUL-1378E	Lever		1	
20	RN-MAS-1070E	Chassis		1	
21	RN-MUF-1022	Flywheel	L	1	
22	RN-MUF-1023E	Flywheel	R	1	
23	RN-MUB-1034	Belt		1	○
24	RN-MUG-1141A	Gear		1	
25	RN-MUG-1142A	Gear		1	
26	RN-MUG-1143A	Gear		1	
27	RN-MUG-1146A	Gear		1	
28	RN-MUG-1147A	Gear		2	
29	RN-MKS-1023G	Slip mechanism		1	○
30	RN-EDM-1078B	DC motor	M1	1	○
31	RN-MKR-1211C	Pinchroller mechanism	L	1	
32	RN-MKR-1212C	Pinchroller mechanism	R	1	
33	RN-MHE-1605E	Holder		1	
34	RN-MSE-1453B	Spacer		2	
35	RN-MSC-1360D	Spring		1	
36	RN-MSC-1361B	Spring		1	
37	RN-MSC-1362B	Spring	L	1	
38	RN-MSC-1363A	Spring	R	1	
39	RN-MPM-2933F	PC board		1	
40	RN-MST-1112	Spacer		3	
41	RN-MSC-1374	Spring		2	
42	RN-MYT-1374	Sub-chassis		1	
43	RN-MSC-1367C	Spring		1	
44	RN-MHZ-1032B	Holder		1	
45	RN-MUC-1027A	Cam		1	

Illus. No. (Fig.11)	Stock No.	Parts name	Description	Q'ty	Remark
46	RN-MSP-1065	Spring		1	
47	RN-MSP-1075B	Pin		1	
48	RN-MSP-1068A	Spring		1	
49	RN-MSC-1369	Spring		1	
50	RN-MSC-1349A	Spring		1	
51	RN-MSC-1272B	Spring		2	
52	RN-MSC-1429A	Spring		1	
53	RN-MUL-1321G	Lever		1	
54	RN-MUL-1322E	Lever		1	
55	RN-MUG-1148A	Gear		1	
56	RN-MUG-1149D	Gear		1	
57	RN-MSC-1364A	Spring		1	
58	RN-MSC-1365F	Spring		1	
59	RN-MSC-1371C	Spring		1	
60	RN-EHM-C44-1060	Playback head	A1	1	○
61	RN-MPM-3177A	PC board		1	
62	RN-ESL-1043	Leaf switch	SW305	1	○
63	RN-EEM-1039G	Solenoid	E2	1	
64	RN-MUG-1150B	Gear		1	
65	RN-MUG-1151A	Gear		1	
66	RN-MUG-1152A	Gear		1	
67	RN-MUG-1153C	Gear		1	
68	RN-MUL-1375F	Lever		1	
69	RN-MUL-1324E	Lever		1	
70	RN-MUB-1035	Belt		1	○
71	RN-MSC-1366C	Spring		1	
72	RN-MSP-1074D	Spring		1	
73	RN-ESL-1044	Leaf switch	SW303	1	○
74	RN-EEM-1045C	Solenoid	E3	1	
75	RN-EEM-1046C	Solenoid	E1	1	
76	RN-ESL-1046	Leaf switch	SW301	1	○
77	RN-MET-1339	Special screw		3	
78	RN-MSE-1683	Spacer		1	
101	RN-MWP-80A	Washer		6	
102	RN-MWP-1112	Washer		2	
103	F6-ER-2	E-type ring	2mm	3	
104	F6-SBD-2X3S	Screw	2x3mm	1	
105	F6-SNA-2X2.5S	Screw	2x2.5mm	2	
106	F6-SBD-2X6S	Screw	2x6mm	1	
107	F6-SNA-2X4S	Screw	2x4mm	1	
108	F6-SBD-2X4S	Screw	2x4mm	7	
109	RN-MWP-1113	Washer		2	
110	RN-MET-1200A	Special screw	1.4x5mm	2	
111	RN-MWP-85	Washer		1	
112	RN-MET-1434	Special screw	2x3mm	3	
113	RN-MET-1266	Special screw	2x3mm	1	

Illus. No. (Fig.11)	Stock No.	Parts name	Description	Q'ty	Remark
114	F6-ER-1.5	E-type ring	1.5mm	2	
115	RN-MHJ-3	Ring	3mm	1	
116	RN-MET-1372	Special screw	2.6x4mm	1	
117	F6-SNA-2X3.5S-M-ZN2A	Screw	2x3.5mm	2	

NOTE : 1.Specifications subject to change without prior notice.